AQUABOTS

Software Integration Plan

ENGR 498B — Spring 2026

ISR Action Item Deliverable

Document Owner: John — Software Integration Lead
Date: February 20, 2026
Status: Pre-ISR Deliverable
Version: 1.0

Contents

1 Purpose . . . 3
2 Team Roles & Subsystem Ownership . . . 3
3 System Architecture & Integration Interfaces . . . 3
3.1 Interface Definitions . . . 4
4 Current Status (as of Feb 20, 2026) . . . 4
5 Integration Schedule . . . 4
6 Integration Verification Metrics . . . 6
6.1 Communication & Latency . . . 6
6.2 Sensor Data Integrity . . . 7
6.3 Propulsion & Navigation . . . 7
6.4 Ground Station & GUI . . . 7
6.5 System-Level . . . 7
7 Integration Test Procedures . . . 8
7.1 Test T-01: Swarm ↔ Propulsion (IF-1) . . . 8
7.2 Test T-02: Sensors → Data Pipeline (IF-2 + IF-3 + IF-4) . . . 8
7.3 Test T-03: Ground Station Command Loop (IF-5 → IF-1) . . . 8
7.4 Test T-04: Full System Smoke Test . . . 9
8 Risk Register . . . 9
9 Dependencies & Critical Path . . . 10
10 Master Timeline . . . 10
11 Deliverables Checklist . . . 10
12 Communication & Coordination . . . 11

1 Purpose

This document defines the concrete, step-by-step plan for integrating all software subsystems into a single AQUABOTS system. It specifies *who does what, when*, what interfaces connect the subsystems, and how we verify that each integration point works.

2 Team Roles & Subsystem Ownership

Member	Subsystem	Hardware	Software Stack
John	Swarm Communications	ESP32 (2+ boards)	ESP-IDF/C — ESPNOW transport, discovery, leader election, TDMA, command engine
Jamie	Sensors & Data Acquisition	pH, temp, salinity probes	Jetson Orin Nano — sensor drivers, data logging, 1080p/30fps camera stream
Mayra	GUI & Ground Station	Operator laptop, Starlink terminal; IMX219 camera	GUI dashboard, GeoOverlay, live-video, Cloud MQTT, Starlink uplink
Robert	Propulsion & Flight Control	Pixhawk, ESC, motor, rudder servo	Pixhawk firmware / MAVLink — motor control, rudder steering, waypoint execution

3 System Architecture & Integration Interfaces

The CDR block diagram defines six buses that cross subsystem boundaries. Each bus is an **integration interface** that must be formally defined, implemented, and verified.

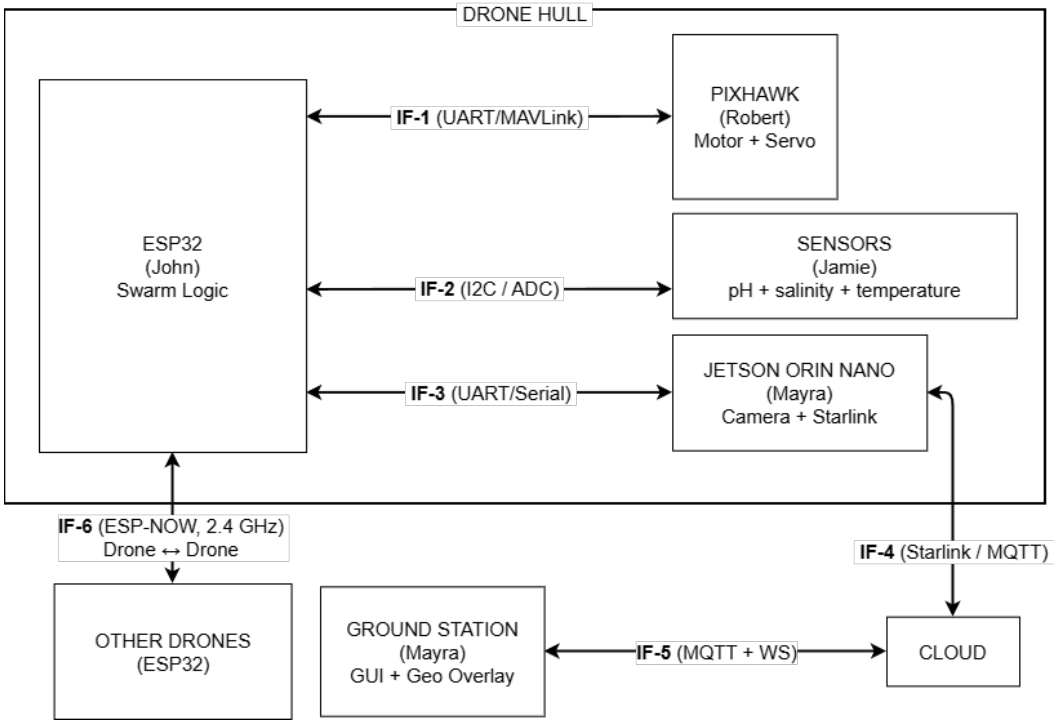

Figure 1: System integration architecture showing all six interface boundaries.

3.1 Interface Definitions

ID	Interface	From → To	Protocol	Data	Owners
IF-1	Swarm ↔ Propulsion	ESP32 ↔ Pixhawk	MAVLink / UART	GOTO, HOLD, STOP commands; position telemetry	John + Robert
IF-2	Sensors → Compute	Probes → ESP32/Jetson	I2C, 1-Wire, CSI	pH, temp, salinity, video	Jamie + John
IF-3	ESP32 ↔ Jetson	ESP32 → Jetson	UART 115200	Swarm state, sensor relay, commands	John + Jamie
IF-4	Drone ↔ Cloud	Jetson → MQTT	MQTT/TLS	Telemetry, sensor data, video	Jamie + Mayra
IF-5	Cloud ↔ Ground Station	MQTT → GUI	MQTT + WS	Telemetry display, operator commands	Mayra
IF-6	Drone ↔ Drone	ESP32 ↔ ESP32	ESP-NOW	Discovery, election, commands	John **(done)**

4 Current Status (as of Feb 20, 2026)

Subsystem	Status	Evidence
Swarm Comms (John)	Steps 1–5 ✅	2-node verified; RTT < 5ms, 0% loss, leader election, command distribution
Sensors (Jamie)	Mounted ✅	Sensor suite mounted per CDR (12/2/25)
GUI & GS (Mayra)	CDE-1 verified ✅	Two-way Starlink data link; GUI prototype with live video + remote command; IMX219 at 1080p/30fps at CDE-1
Propulsion (Robert)	In progress 🟡	Propulsion deliverable due 2/19/26; Pixhawk + ESC under test

5 Integration Schedule

Phase 0: Interface Agreement

Week 7 — Feb 24–28

Goal: All four team members formally agree on every interface definition. No code — just the contracts.

Task	Owner(s)	Deliverable	Due	Verification
0.1	John + Robert	`IF1_SPEC.md` — MAVLink message IDs, fields, units, rates	Feb 26	Both independently describe same format
0.2	Jamie + John	`IF2_SPEC.md` — sensor data struct/ schema per sensor	Feb 26	Driver output matches expected input
0.3	John + Jamie	`IF3_SPEC.md` — ESP32↔Jetson packet framing, baud	Feb 27	Loopback test: 100% packet integrity
0.4	Jamie + Mayra	`IF4_SPEC.md` — MQTT topics + JSON payloads	Feb 27	Test publish → GUI receives
0.5	Mayra + John	`IF5_SPEC.md` — GUI command topics + ACK flow	Feb 28	GUI sends waypoint, drone logs receipt

0.6	ALL	Team sign-off (30-min meeting)	Feb 28	Each person confirms their interfaces

Exit Criteria:

- All 5 interface spec documents committed to shared repo (IF-6 already complete)
- Each spec has: message format, units, sample rates, error codes
- Every team member has signed off

Phase 1: Pairwise Stub Integration (Weeks 8–9 — Mar 2–13)

Goal: Each interface tested with one real side + one stub. Spring Break is Week 9 — front-load critical work to Week 8.

Task	Owner	What	Due	Pass Criteria
1.1	John	ESP32 sends GOTO/STOP MAVLink over UART; verify with serial monitor	Mar 3	Correct MAVLink framing on TX
1.2	Robert	Pixhawk parses MAVLink GOTO; returns ACK	Mar 5	ACK received by ESP32 < 100ms
1.3	Jamie	Each sensor driver outputs IF-2 struct; unit tests	Mar 3	pH ±0.1, temp ±0.5°C, salinity ±1 ppt
1.4	John	ESP32 reads IF-2 structs; logs to console	Mar 5	Valid readings at 1 Hz on console
1.5	Jamie	Jetson publishes stub telemetry to MQTT	Mar 3	MQTT Explorer shows correct topic
1.6	Mayra	GUI subscribes; displays data + GeoOverlay	Mar 5	Dashboard updates < 2s after publish
1.7	Mayra	GUI GOTO button → MQTT command	Mar 6	Jetson logs receipt
1.8	John + Jamie	ESP32↔Jetson bidirectional serial packets	Mar 6	100% integrity over 1000 packets

Phase 2: Subsystem Pair Integration (Weeks 10–11 — Mar 16–27)

Goal: Real subsystems connected in pairs — real data, real hardware.

Task	Pair	What	Due	Pass Criteria
2.1	John + Robert	ESP32 `goto 100 200` → Pixhawk executes motor move	Mar 19	Motor spins; rudder deflects; ACK received
2.2	Jamie + John	Live pH/temp/salinity flow into ESP32 at 1 Hz	Mar 19	Console shows real values within tolerance
2.3	Jamie + Mayra	Jetson publishes live sensor + camera via Starlink to GUI	Mar 23	Dashboard shows live data; video < 5s latency
2.4	Mayra + John	GUI click → MQTT → Jetson → ESP32 → Pixhawk	Mar 26	End-to-end < 10s; Pixhawk logs waypoint
2.5	John + Robert	Leader GOTO → both drones execute → Pixhawk on each	Mar 27	Both motors activate within 100ms

Phase 3: Full System Integration (Weeks 12–13 — Mar 30 – Apr 10)

Goal: All four subsystems running simultaneously on a complete drone.

Task	Owner	What	Due	Pass Criteria
3.1	ALL	Single-drone full stack: GUI→Starlink→Jetson→ESP32→Pixhawk; sensors stream back	Apr 2	Full loop; GUI shows position + sensor data
3.2	ALL	Two-drone swarm: leader election, synchronized GOTO, both report to GUI	Apr 7	Both move; GeoOverlay shows 2 icons
3.3	Jamie + John	Sensor readings valid while drone moving (vibration test)	Apr 7	Readings within spec during 60s of nav
3.4	ALL	E-STOP: GUI button → both drones halt within 2 seconds	Apr 9	Motors off < 2s; GUI shows STOPPED
3.5	ALL	Graceful degradation: kill Starlink → drones hold autonomously	Apr 10	Drones HOLD; resume on link restore

Phase 4: Pool Testing & Validation (Weeks 14–15 — Apr 13–24)

Task	Owner	What	Due	Pass Criteria
4.1	ALL	Single-drone pool: GOTO, HOLD, sensor collection, GUI display	Apr 16	Waypoint ±1m; hold ±0.5m; data at GUI
4.2	ALL	Multi-drone pool: synchronized movement, no collisions	Apr 21	Formation ±1m; no collisions
4.3	ALL	Full mission: deploy, navigate pattern, collect data, return	Apr 24	Mission completes; all data captured

6 Integration Verification Metrics

6.1 Communication & Latency

Metric	Requirement	Measurement Method	Owner
ESPNOW RTT (drone↔drone)	< 10 ms	Timestamp in TX, measure at RX	John
MAVLink latency (ESP32→Pixhawk)	< 100 ms	Send timestamp vs ACK timestamp	John + Robert
MQTT round-trip (drone→cloud→GUI)	< 5 s	Payload timestamp vs GUI display time	Jamie + Mayra
E-STOP response (GUI→motor off)	< 2 s	Button timestamp → motor current = 0	ALL
Swarm command sync	< 100 ms between nodes	Compare execution timestamps	John

6.2 Sensor Data Integrity

Metric	Requirement	Measurement Method	Owner
pH accuracy	± 0.1 pH	Calibrated reference probe	Jamie
Temperature accuracy	± 0.5 °C	NIST-traceable thermometer	Jamie
Salinity accuracy	± 1 ppt	Known solution	Jamie
Sensor sample rate	≥ 1 Hz sustained	Count readings over 60 s	Jamie + John
Data loss (sensor→GUI)	< 1%	Sensor log count vs GUI count	Jamie + Mayra
Camera latency	< 5 s	Clock in frame vs display time	Jamie + Mayra
Camera resolution	1080p @ 30fps	Stream properties inspection	Jamie

6.3 Propulsion & Navigation

Metric	Requirement	Measurement Method	Owner
Waypoint accuracy	± 1 m	GPS vs commanded waypoint	Robert + John
Heading accuracy	± 5°	IMU heading vs command	Robert
Position hold drift	± 0.5 m / 60 s	GPS log during HOLD	Robert + John
E-stop motor response	< 500 ms	Current sensor timestamp	Robert

6.4 Ground Station & GUI

Metric	Requirement	Measurement Method	Owner
Dashboard update rate	≥ 1 Hz	Count refreshes over 60 s	Mayra
GeoOverlay accuracy	Matches GPS ± 2 m	GUI marker vs drone position	Mayra + John
Command ACK latency	< 5 s	Button press to ACK display	Mayra
Multi-drone display	All drones visible	Visual inspection with 2 + drones	Mayra
Video uptime	> 95%	Dropped frames / total	Mayra + Jamie

6.5 System-Level

Metric	Requirement	Measurement Method	Owner
Battery life	> 30 min	Timed full-charge to cutoff	ALL
ESP32 CPU utilization	< 50%	`vTaskGetRunTimeStats()`	John
ESP32 heap usage	< 200 KB	`esp_get_free_heap_size()`	John
Starlink loss recovery	Drones hold position	Kill Starlink, observe	ALL
Reboot recovery	Rejoin swarm < 30 s	Power cycle, measure	John + Robert

7 Integration Test Procedures

7.1 Test T-01: Swarm ↔ Propulsion (IF-1)

Setup: ESP32 → Pixhawk via UART. Motor on test stand.

Step	Action	Expected Result	P/F
1	Power on ESP32 + Pixhawk	Both boot; serial link established	
2	Console: `goto 100 200 90`	MAVLink GOTO sent; ACK < 100ms	
3	Observe motor	Motor spins; rudder deflects toward 90°	
4	Console: `hold`	Motor adjusts to maintain position	
5	Console: `stop`	Motor off within 500ms	
6	Check telemetry	Position/heading updates ≥1 Hz on console	

7.2 Test T-02: Sensors → Data Pipeline (IF-2 + IF-3 + IF-4)

Setup: Sensors → ESP32/Jetson → Starlink → GUI.

Step	Action	Expected Result	P/F
1	pH probe in pH 7.0 buffer	ESP32 reads 7.0 ± 0.1	
2	Check Jetson	Receives pH reading via serial	
3	Check MQTT broker	`aquabot/1/sensor/ph` shows 7.0	
4	Check GUI	Dashboard gauge shows 7.0 ± 0.1	
5	Repeat for temp (ice water)	End-to-end shows 0°C	
6	Run 60 seconds	≥60 readings at GUI; loss < 1%	

7.3 Test T-03: Ground Station Command Loop (IF-5 → IF-1)

Setup: GUI on laptop. Starlink active. ESP32 + Pixhawk on drone.

Step	Action	Expected Result	P/F
1	Click waypoint on GeoOverlay	GUI publishes MQTT command	
2	Check Jetson	Receives command, forwards to ESP32	
3	Check ESP32	Console: "Command received: GOTO …"	
4	Check Pixhawk	Receives MAVLink GOTO, sends ACK	
5	Check GUI	ACK displayed within 5 seconds	
6	Click E-STOP	Motors off < 2s; GUI shows STOPPED	

7.4 Test T-04: Full System Smoke Test

Setup: Complete drone on test stand. All subsystems powered. GUI via Starlink.

Step	Action	Expected Result	P/F
1	Power on drone	All boot < 30s; ESP32 joins swarm; Jetson connects Starlink	
2	Check GUI	Drone icon on GeoOverlay at correct position	
3	Check sensors	pH, temp, salinity visible on dashboard	
4	GUI: send GOTO	Motor activates; status = NAVIGATING	
5	Wait for arrival	GUI shows ARRIVED	
6	GUI: send HOLD	Motors adjust to maintain position	
7	GUI: send STOP	Motors off; status = STOPPED	
8	Kill Starlink	Drone enters autonomous HOLD	
9	Restore Starlink	Drone reconnects; GUI shows live data	

8 Risk Register

#	Risk	Prob	Impact	Mitigation	Owner
R1	MAVLink format mismatch ESP32↔Pixhawk	Med	High	Spec in Phase 0; logic analyzer in Phase 1	John + Robert
R2	Starlink latency too high for control	Low	Med	Critical control via ESP-NOW; Starlink for telemetry only	Mayra + John
R3	Sensor noise during motor vibration	Med	Med	Test during operation in Phase 3; add filtering	Jamie
R4	MQTT broker downtime	Low	High	Retained messages + Jetson local fallback; drones HOLD	Mayra + Jamie
R5	UART port contention on ESP32	Med	Med	UART0=console, UART1=Pixhawk, UART2=Jetson; verify early	John
R6	Spring Break schedule slip	High	Med	Front-load Phase 1 critical tasks to Week 8	ALL
R7	Waterproofing failure	Med	High	Bench-test all integration before pool; conformal coating	ALL
R8	Pixhawk firmware incompatibility	Low	High	Verify firmware + MAVLink v2 support in Phase 0	Robert

9 Dependencies & Critical Path

The critical path runs through **IF-1 (Swarm ↔ Pixhawk)** because it involves two microcontrollers from different team members communicating over a real-time protocol. This interface must be tested earliest and given the most schedule buffer.

```
Phase 0 (Specs)
    ├──► Phase 1.1-1.2 (Swarm↔Propulsion stubs) ──► Phase 2.1 (Pair)
    ├──► Phase 1.3-1.4 (Sensors↔ESP32 stubs)    ──► Phase 2.2 (Pair)
    ├──► Phase 1.5-1.7 (Jetson↔GUI stubs)       ──► Phase 2.3 (Pair)
    └──► Phase 1.8 (ESP32↔Jetson serial)        ──► Phase 2.4 (E2E)
                                                          │
                                                          ▼
                                        Phase 3 (Full system) ──► Phase 4 (Pool)
```

10 Master Timeline

Week	Dates	Phase	Key Milestone
7	Feb 24–28	Phase 0	ISR; all interface specs agreed and signed
8	Mar 2–6	Phase 1	Pairwise stub testing complete
9	Mar 9–13	*Break*	Buffer / async catch-up
10	Mar 16–20	Phase 2a	Swarm↔Propulsion + Sensors↔ESP32 pair-tested
11	Mar 23–27	Phase 2b	Jetson↔GUI + end-to-end command pair-tested
12	Mar 30 – Apr 3	Phase 3a	Single-drone full-stack passes
13	Apr 6–10	Phase 3b	Two-drone swarm passes; E-STOP verified
14	Apr 13–17	Phase 4a	Single-drone pool test
15	Apr 20–24	Phase 4b	Multi-drone pool + full mission test
16	Apr 27 – May 1	Finalize	Manual, documentation, Design Day prep
17	May 5	Submit	Final report due

11 Deliverables Checklist

Documents (due end of Phase 0 — Feb 28):

- `IF1_SPEC.md` — MAVLink definitions (John + Robert)
- `IF2_SPEC.md` — Sensor data structs (Jamie + John)
- `IF3_SPEC.md` — ESP32↔Jetson serial protocol (John + Jamie)
- `IF4_SPEC.md` — MQTT topic tree + payloads (Jamie + Mayra)
- `IF5_SPEC.md` — GUI command protocol (Mayra + John)

Note: IF-6 (Drone ↔ Drone, ESP-NOW) is already complete and verified — no additional spec required.

Test Reports (due at each phase gate):

- Phase 1 results (Mar 6)
- Phase 2 results (Mar 27)
- Phase 3 results (Apr 10)
- Phase 4 results (Apr 24)

12 Communication & Coordination

What	How	Frequency
Integration standup	In-person or Discord	2×/week (Tue/Thu)
Spec reviews	Pull request on GitHub	As drafted (Phase 0)
Test results	Shared Drive folder	After each test session
Blocker escalation	Group chat + standup	As needed
Phase gate review	15-min team meeting	End of each phase